UNIVERSITAS DIPONEGORO
The Excellent Research University

PROGRAM STUDI D4
TEKNOLOGI REKAYASA OTOMASI
SEKOLAH VOKASI

MUHAMMAD AKBAR ARDIANSYAH
4004032562002 5

DOSEN PENGAMPU :

MEGARINI HERSAPUTRI S.T,M.T,
ROFIQ CAHYO PRAYOGO, S.T,M.T.

MATERI

- CARA MEMBUAT FILE ASSEMBLY
- JENIS-JENIS MATES
- REFERENCE GEOMETRY COORDINATE
- PRAKTEK

APA ITU ASSEMBLY

Assembly -> Menggabungkan bebera paparts menjadi satu kesatuan yang utuh

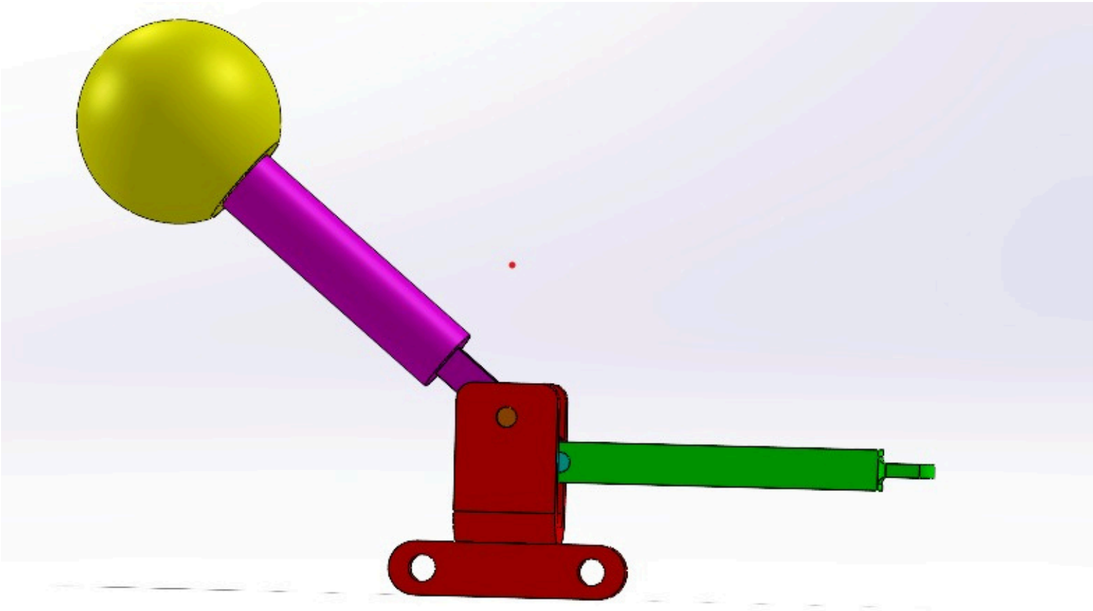

CARA MEMBUAT FILE ASSEMBLY

Klik file -> new -> lalu pilih Assembly

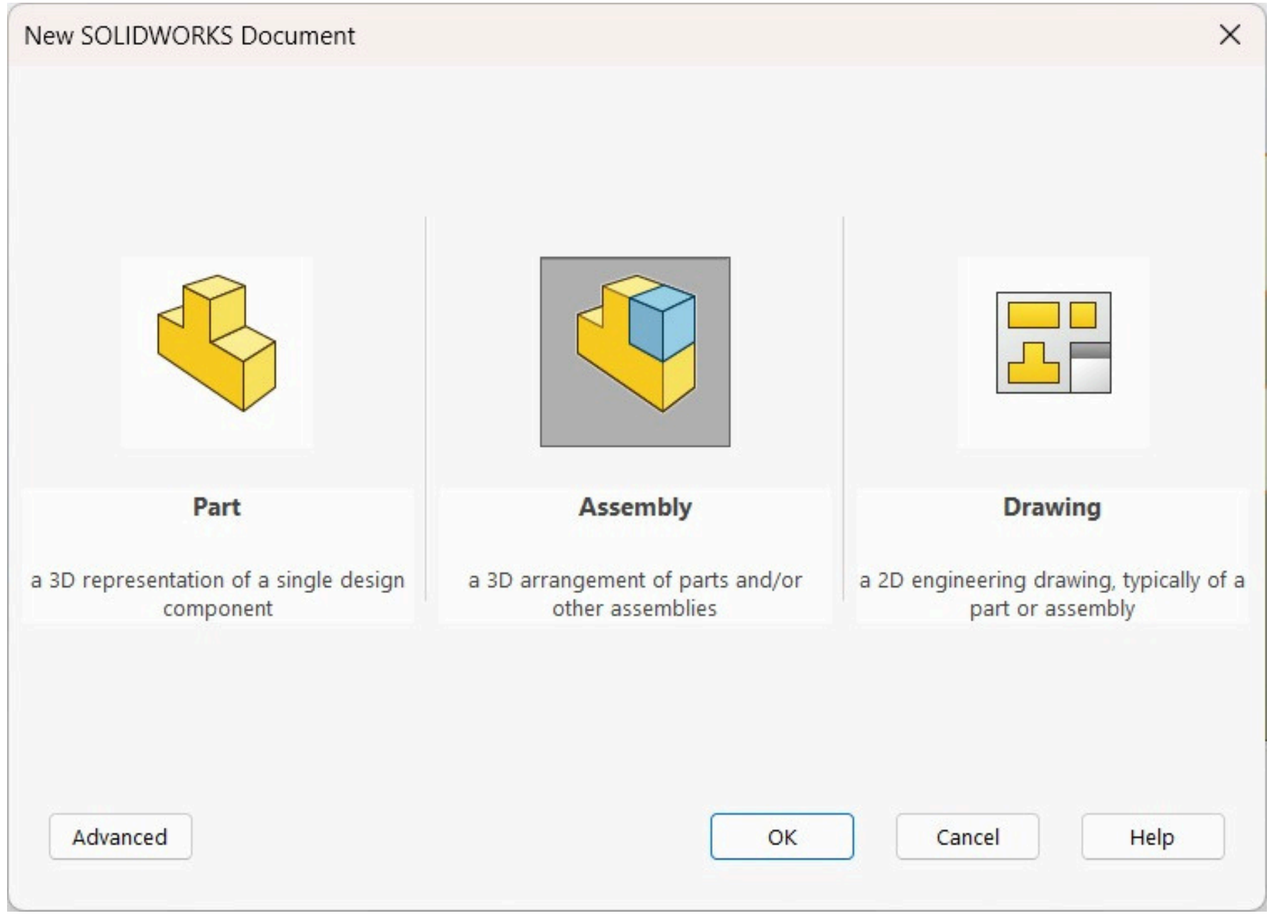

APA ITU MATES

Mates->fiturrelasi/hubunganantarpartssupaya saling membentuk satu kesatuan

JENIS-JENIS MATES

- Standar
- Advanced
- Mechanical
- Analysis

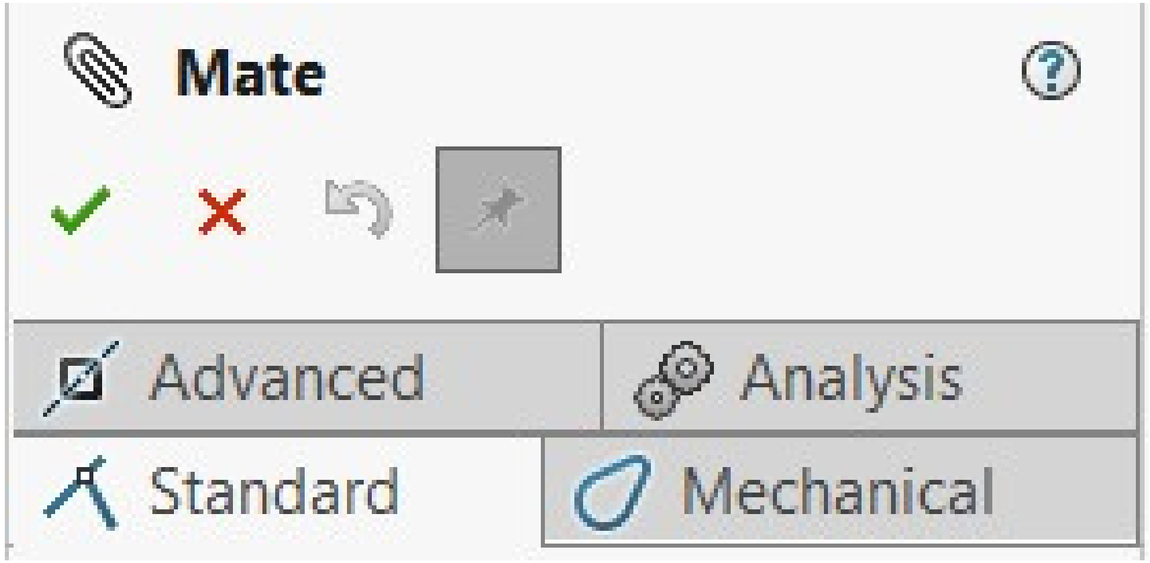

TIPE-TIPE STANDARD MATES

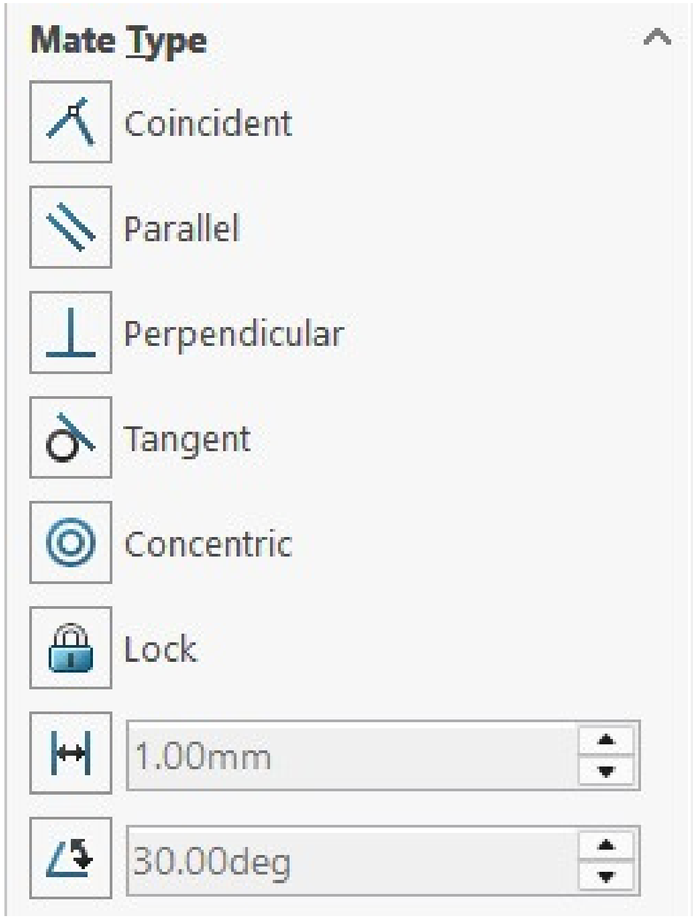

Coincident = Menggabungkan antara 2 bentuk

Parallel = Membuat bentuk sejajar

Perpendicular = Bentuk saling tegak lurus (90°)

Tangent = Permukaan melengkung menempel pada permukaan lain

Concentric = Menyamakan titik pusat sesama lingkaran/silinder

Lock = Mengunci parts supaya tidak berubah-ubah

Distance = Memberi jarak antara kedua parts

Angle = Memberi jarak sudut antara kedua parts

APA ITU REFERENCE GEOMETRY COORDINATE

-> Fitur untuk mengetahui titik koordinat tertentu pada komponen

Cara: Klik features -> reference geometry -> lalu pilih Coordinate System

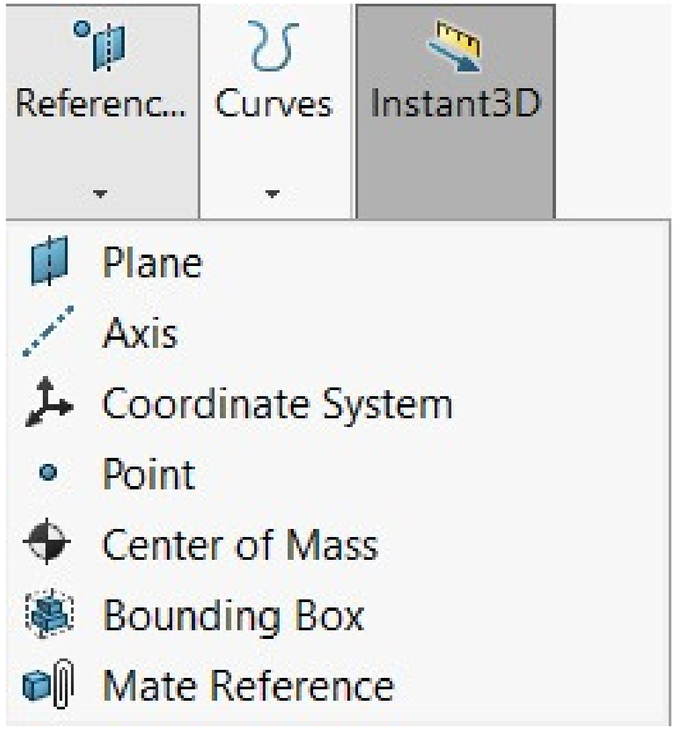

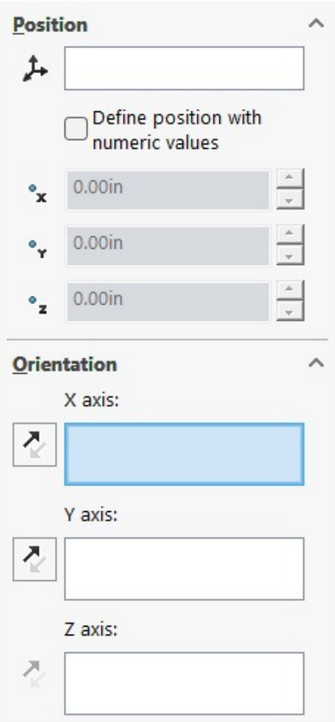

COBA
REFERENCE GEOMETRY COORDINATE

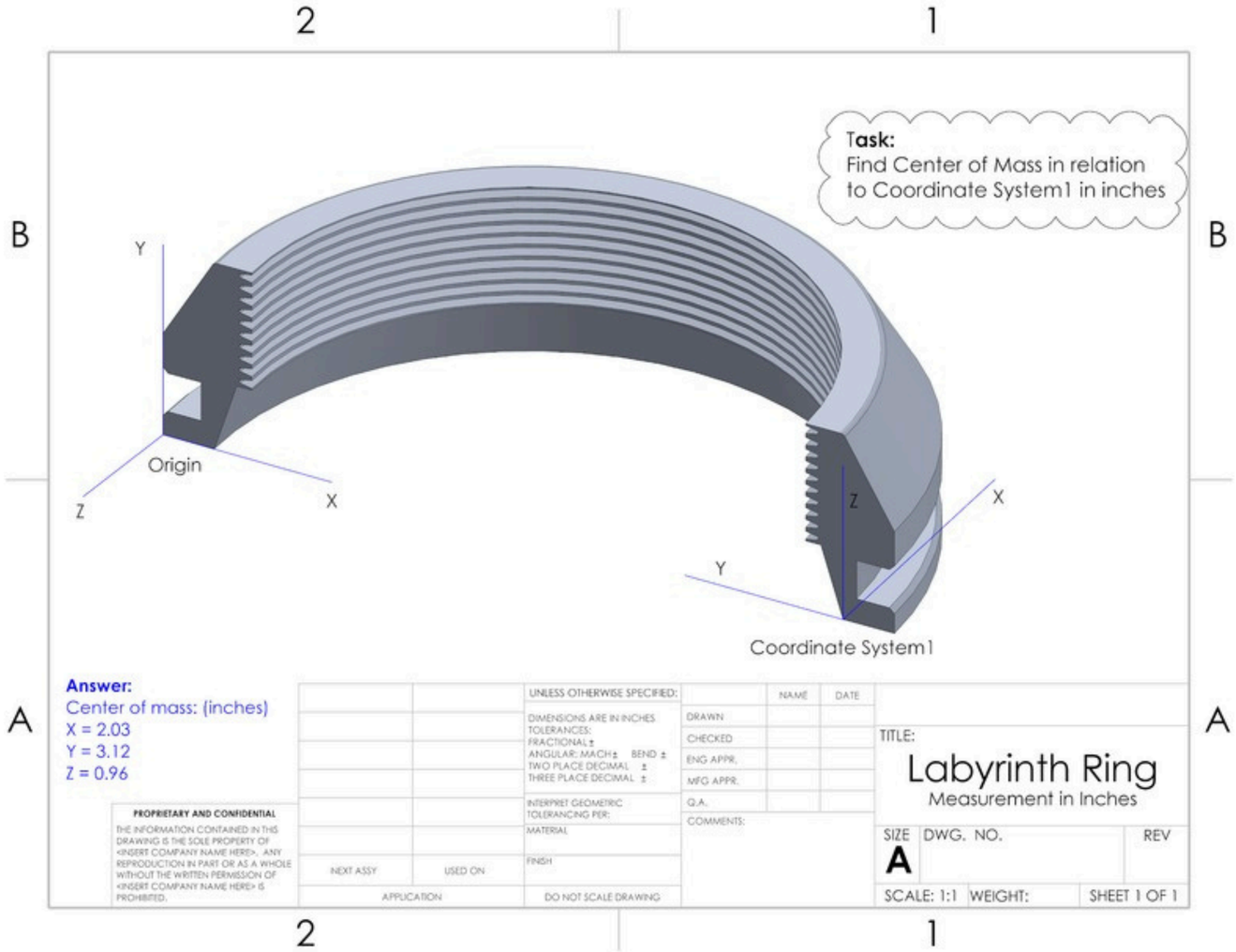

PRAKTEK I

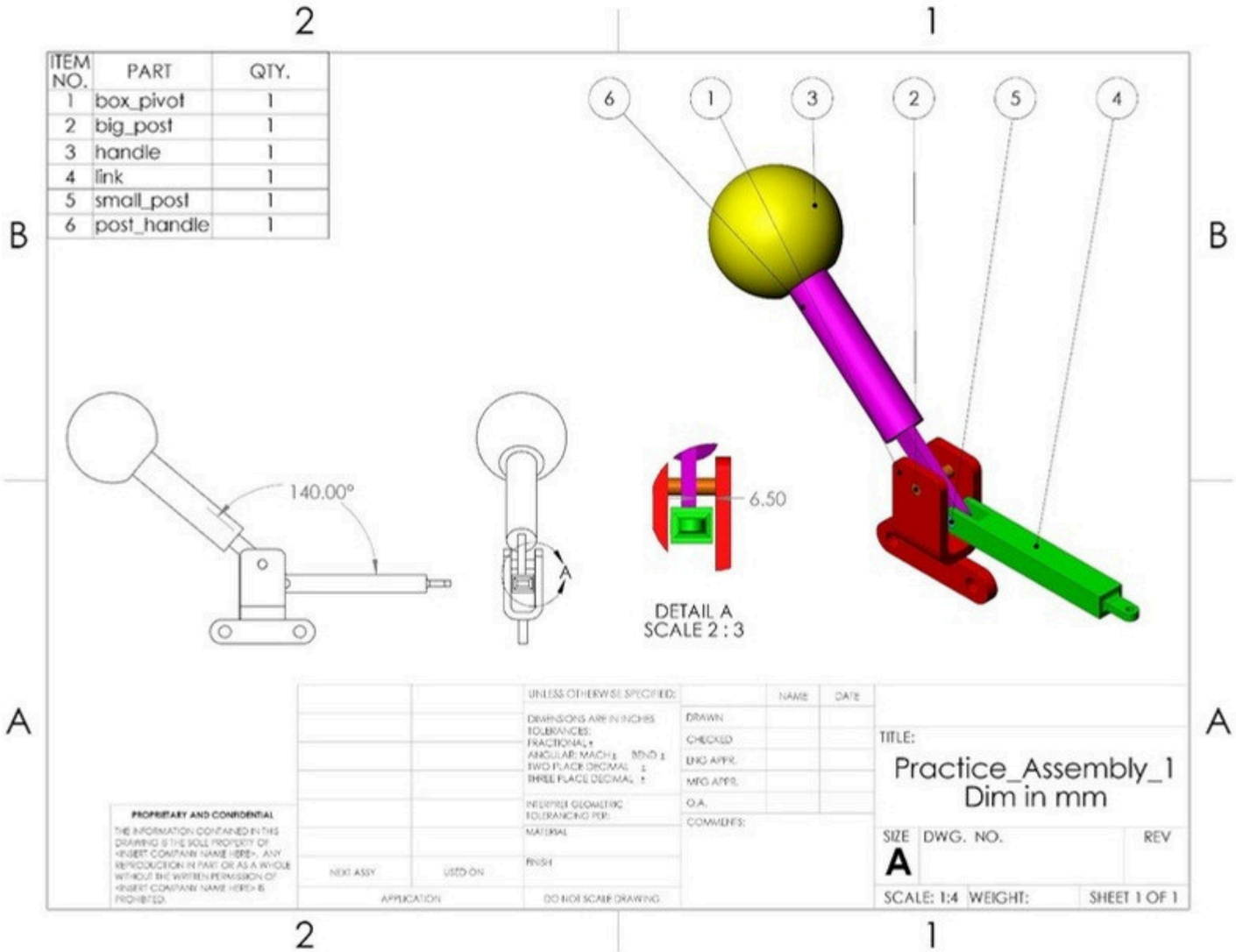
ITEM NO. | PART | QTY.
1 box_pivot 1
2 big_post 1
3 handle 1
4 link 1
5 small_post 1
6 post_handle 1
140.00°
6.50
DETAIL A
SCALE 2 : 3
TITLE:
Practice_Assembly_1
Dim in mm
SIZE A
DWG. NO.
REV
SCALE: 1:4
WEIGHT:
SHEET 1 OF 1

PRAKTEK 2

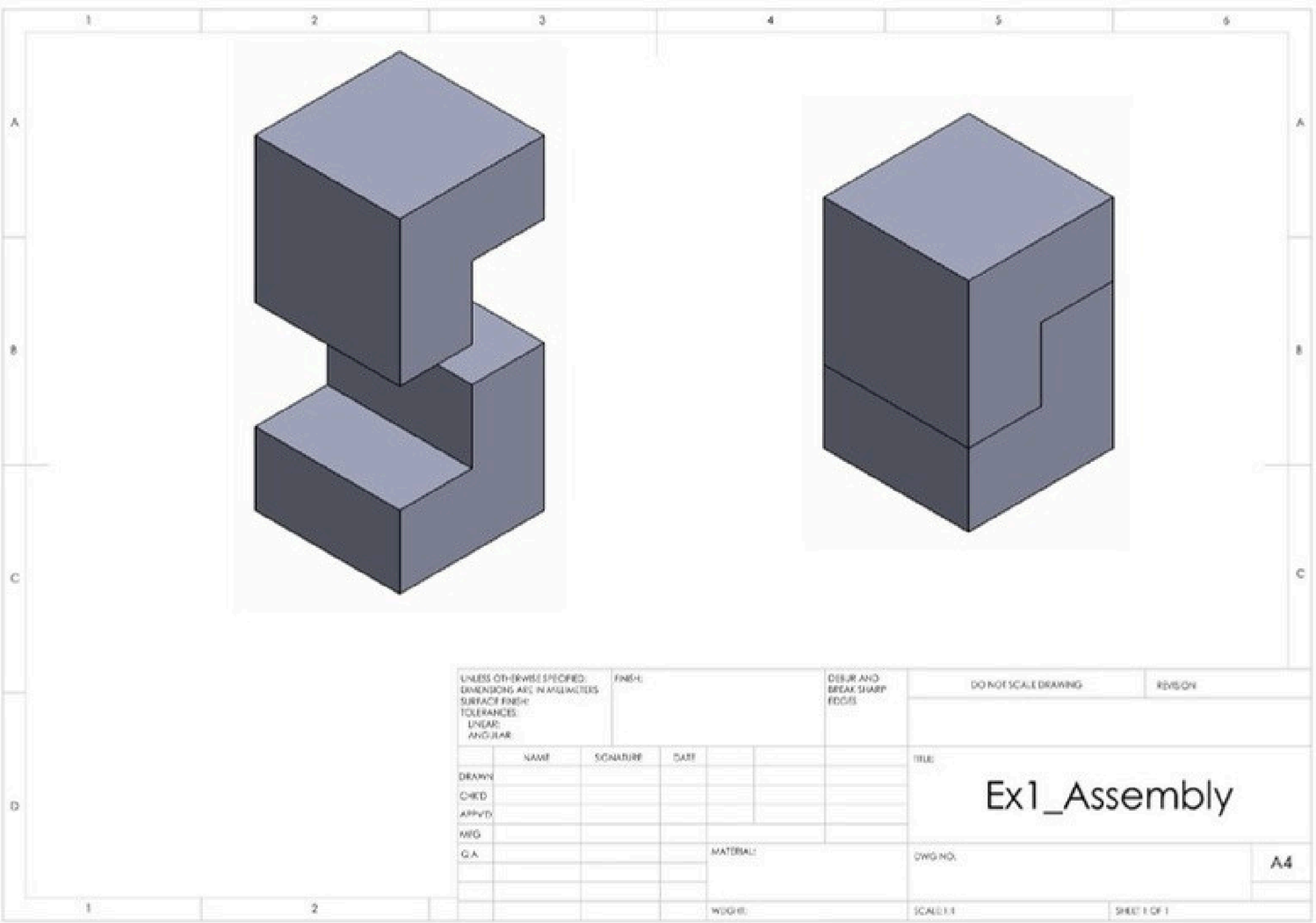
UNLESS OTHERWISE SPECIFIED:
DIMENSIONS ARE IN MILLIMETERS
SURFACE FINISH:
TOLERANCES:
LINEAR:
ANGULAR:
FINISH:
DEBUR AND BREAK SHARP EDGES
DO NOT SCALE DRAWING
REVISION
NAME
SIGNATURE
DATE
DRAWN
CHKD
APPVD
MFG
Q.A.
MATERIAL:
WEIGHT:
TITLE:
Ex1_Assembly
DWG NO.
A4
SCALE: 1:1
SHEET 1 OF 1

PRAKTEK 3

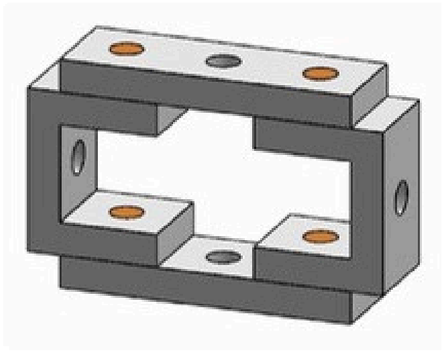

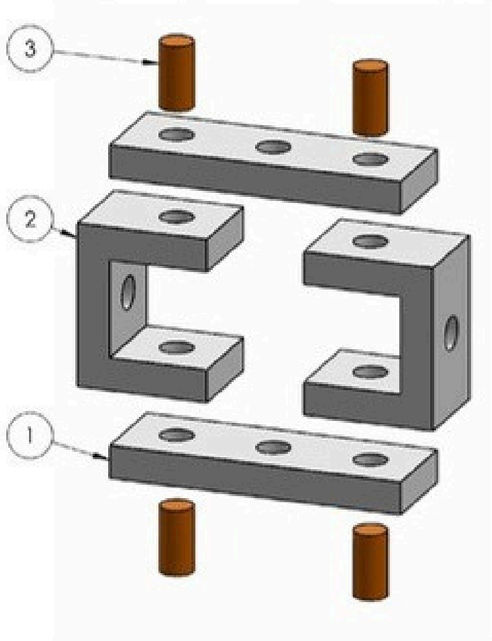

ITEM NO.	PART NUMBER	QTY.
1	Triple Spacer	2
2	C Bracket	2
3	Pin	4

UNLESS OTHERWISE SPECIFIED:
DIMENSIONS ARE IN MILLIMETERS
SURFACE FINISH:
TOLERANCES:
LINEAR:
ANGULAR:

FINISH:

DEBUR AND BREAK SHARP EDGES

DO NOT SCALE DRAWING

REVISION

	NAME	SIGNATURE	DATE
DRAWN			
CHK'D			
APPV'D			
MFG			
Q.A.			

MATERIAL:

WEIGHT:

TITLE:

EX 2 _ Assembly

DWG NO.

A4

SCALE: 1:2

SHEET 1 OF 1

PRAKTEK 4

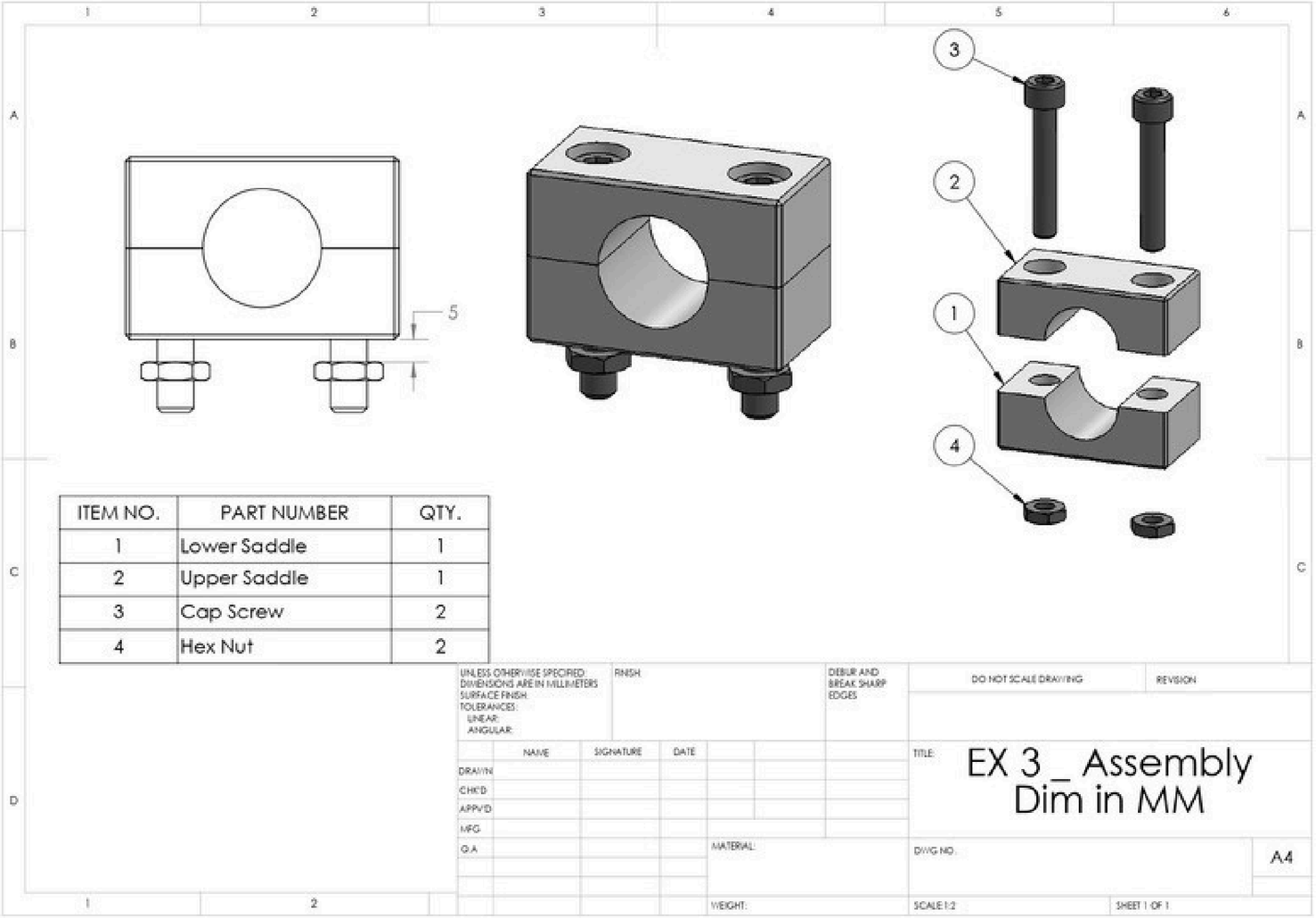
5
3
2
1
4
ITEM NO. | PART NUMBER | QTY.
1 | Lower Saddle | 1
2 | Upper Saddle | 1
3 | Cap Screw | 2
4 | Hex Nut | 2
UNLESS OTHERWISE SPECIFIED:
DIMENSIONS ARE IN MILLIMETERS
SURFACE FINISH:
TOLERANCES:
LINEAR:
ANGULAR:
FINISH:
DEBUR AND BREAK SHARP EDGES
DO NOT SCALE DRAWING
REVISION
NAME
SIGNATURE
DATE
DRAWN
CHK'D
APPV'D
MFG
Q.A
MATERIAL:
WEIGHT:
TITLE:
EX 3 _ Assembly
Dim in MM
DWG NO.
A4
SCALE:1:2
SHEET 1 OF 1

TERIMA KASIH